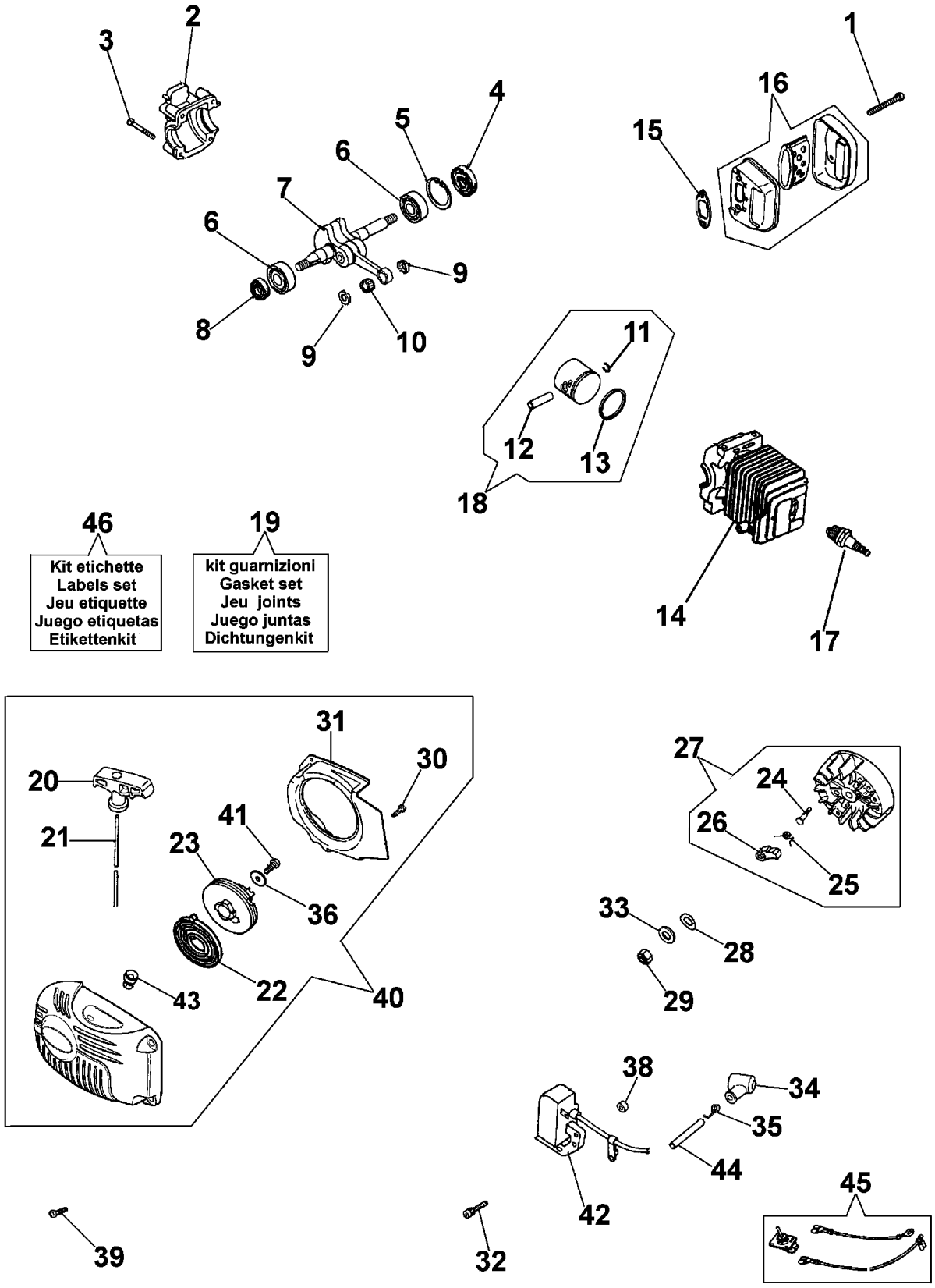
1
2
3
4
5
6
6
7
8
9
9
10
11
12
13
14
15
16
17
18
19
kit guarnizioni
Gasket set
Jeu joints
Juego juntas
Dichtungenkit
20
21
22
23
24
25
26
27
28
29
30
31
32
33
34
35
36
38
39
40
41
42
43
44
45
46
Kit etichette
Labels set
Jeu etiquette
Juego etiquetas
Etikettenkit

ИллюстрацияEngine

Ссылка №	Кол-во	Код артикула	Наименование
1	2	50030285	Screw
2	1	50040189R	Crankcase assy
3	4	50030004R	Screw
4	1	50030013R	Seal ring
5	1	50030014R	Ring
6	2	50030012R	Bearing
7	1	50030011R	Crankshaft
8	1	61070074	Seal ring
9	2	50030010R	Spacer
10	1	50030009R	Bearing
11	2	50030008R	Ring
12	1	50030007R	Piston pin
13	1	50030006R	Piston ring
14	1	50030002R	Cylinder
15	1	50030020	Gasket
16	1	50030309	Muffler
17	1	50030297R	Spark plug
18	1	50032010	Piston assy Ø37
19	1	50032008	Gasket set
20	1	093500397	Starter handle
21	1	4098073R	Starter rope
22	1	004000132R	Spring
23	1	094000033AR	Starter pulley
24	2	004000436R	Pin
25	2	50030112	Spring
26	2	004000140R	Pawl
27	1	50030143R	Flywheel
28	1	005000361	Washer
29	1	004000142	Nut
30	1	50030272	Screw
31	1	50030161	Flange
32	2	50030295	Screw
33	1	3833080	Washer
34	1	50030287	Spark plug cap
35	1	50030267	Spring
36	1	094500034R	Washer
38	1	50030145R	Spacer
39	4	50030269R	Screw
40	1	50032025R	Starter case
41	1	094600041AR	Screw
42	1	50030142R	Ignition coil
43	1	50030160R	Bushing
44	1	50030150R	Sheath
45	1	50030151R	Switch
46	1	50032043	Labels kit

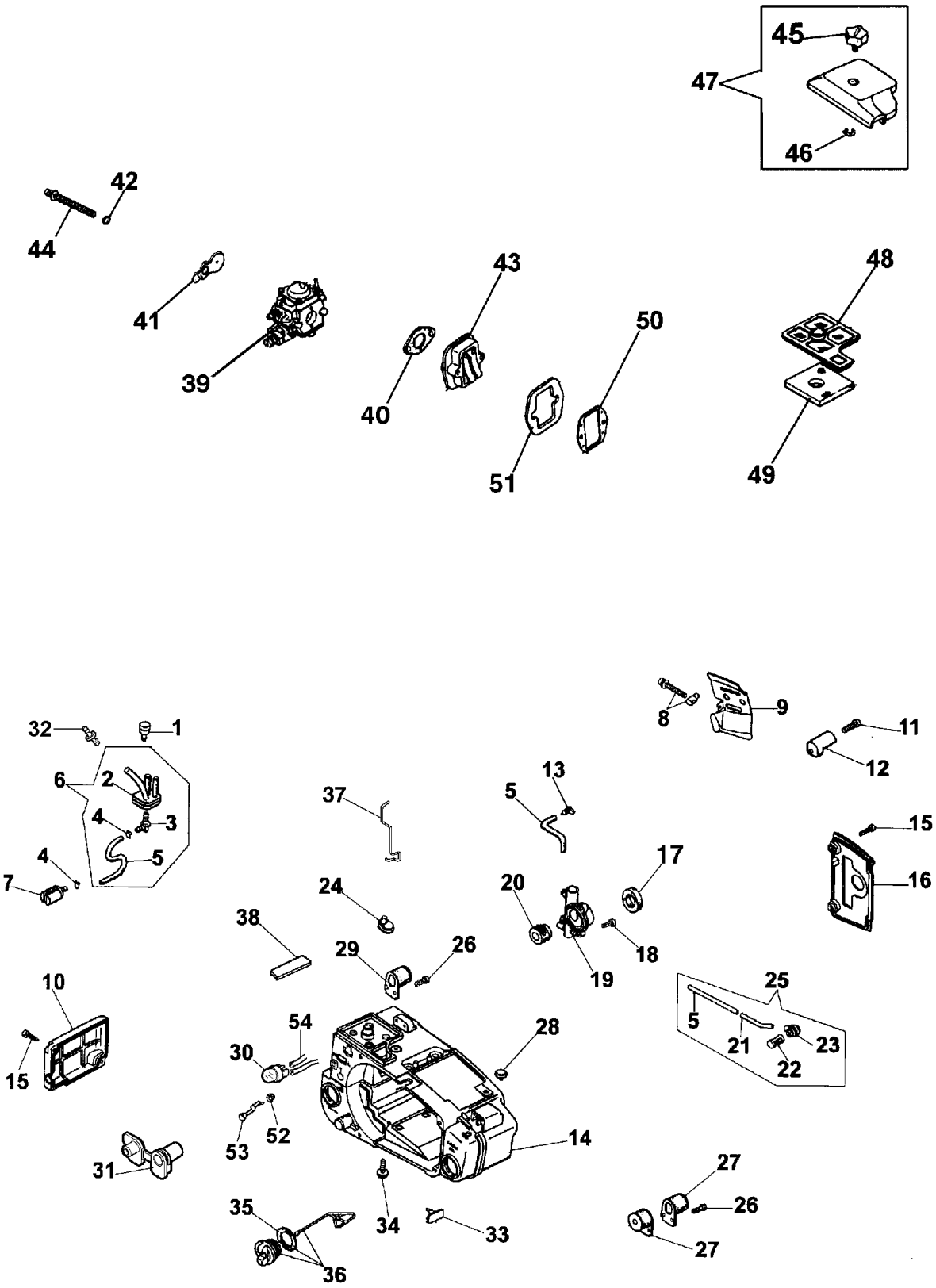
45
47
46
42
44
41
39
43
40
50
51
48
49
32
1
6
2
4
3
5
4
7
37
13
5
8
9
11
12
15
16
17
24
20
38
29
26
18
19
10
15
54
30
28
25
5
21
23
22
52
53
14
31
27
26
35
34
33
27
36

ИллюстрацияTank and air filter

Ссылка №	Кол-во	Код артикула	Наименование
1	1	50030040R	Breather valve
2	1	50030390	Bush
3	1	50030286	Fittings
4	2	50030037R	Band
5	1	50030265R	Fuel line
6	1	50030329	Fittings
7	1	50030036R	Fuel filter
8	1	50032011	Chain tensioner screw
9	1	50030125	Plate
10	1	50030063R	Cover
11	1	50030270	Screw
12	1	50030127R	Guard
13	1	50030052R	Clamp
14	1	50030024R	Crankcase assy
15	2	50030269R	Screw
16	1	50030140R	Cover
17	1	50030139R	Gasket
18	3	50030291	Screw
19	1	50032020R	Oil pump
20	1	50030136R	Worm gear
21	1	50030047R	Oil line
22	1	50030289	Filter
23	1	50030046R	Bush
24	1	50030173R	Grommet
25	1	50032057R	Oil suction
26	8	50030272	Screw
27	2	50030229R	Support
28	1	50030053R	Breather valve
29	2	50030085R	Support
30	1	50060012	Air purge
31	1	50030385	Screw guide
32	1	50160173	Fitting
33	1	50030033R	Breather valve
34	4	50030374R	Screw
35	1	50030268	Gasket
36	2	50030304R	Cap
37	1	50030368	Rod
38	1	50030057R	Cover
39	1	2318633R	Carburetor WT-705
40	1	004000025	Gasket
41	1	50030337R	Starter lever
42	2	50030284	Spacer
43	1	50030022R	Valve
44	2	50030276R	Screw
45	1	50030308	Knob
46	1	50030184R	Ring

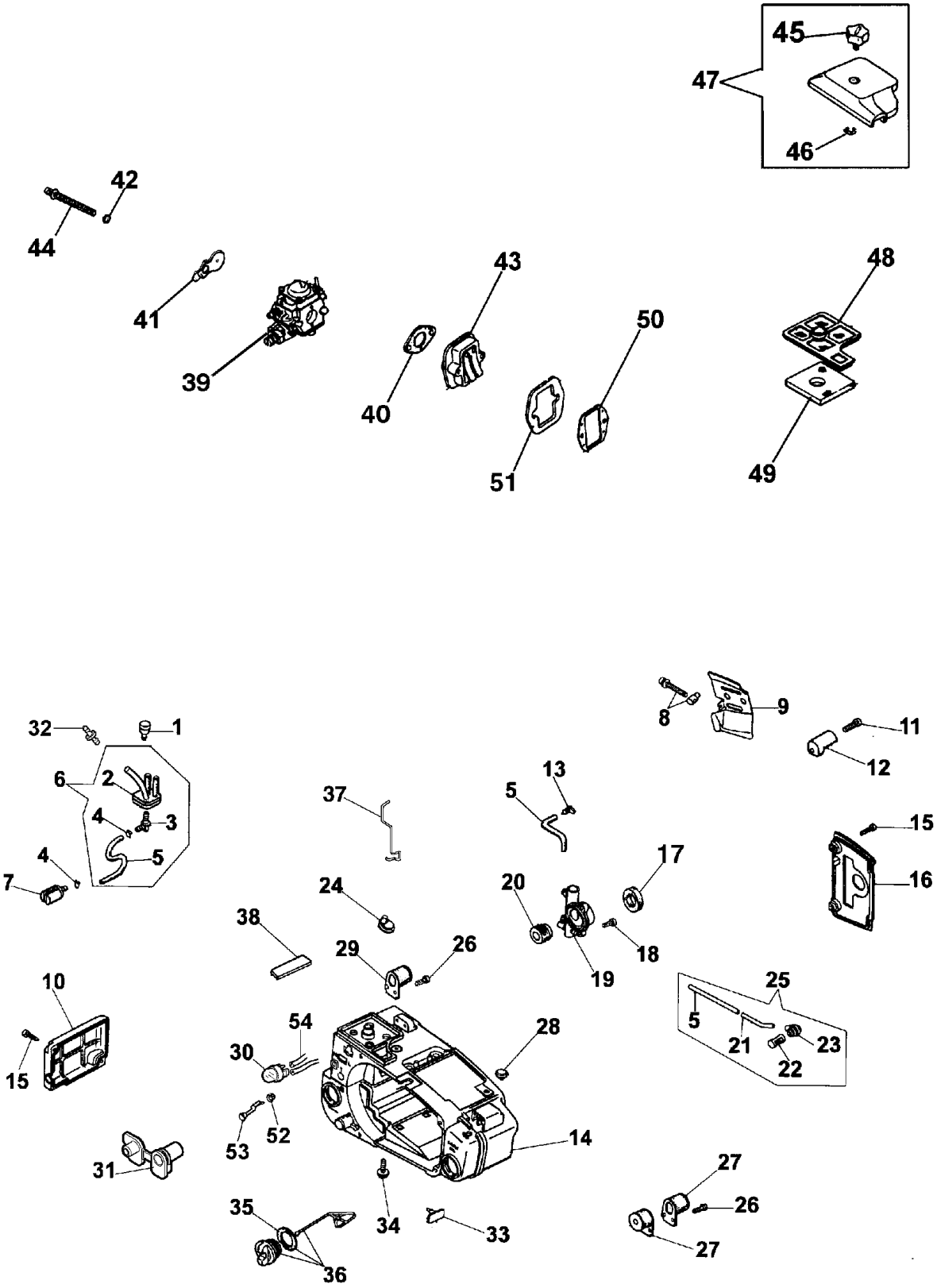
45
47
46
42
44
41
39
43
40
50
51
48
49
32
1
6
2
4
3
5
4
7
37
13
5
8
9
11
12
15
16
17
24
20
38
29
26
18
19
10
15
54
30
28
25
5
21
23
22
52
53
14
31
27
26
35
34
33
36
27

ИллюстрацияTank and air filter

Ссылка №	Кол-во	Код артикула	Наименование
47	1	50030306	Cover
48	1	50030277	Air filter
49	1	50030281R	Filter
50	1	50030023	Gasket
51	1	50030056R	Gasket
52	1	50030177R	Grommet
53	1	50030176R	Starter lever
54	2	50030330R	Hose

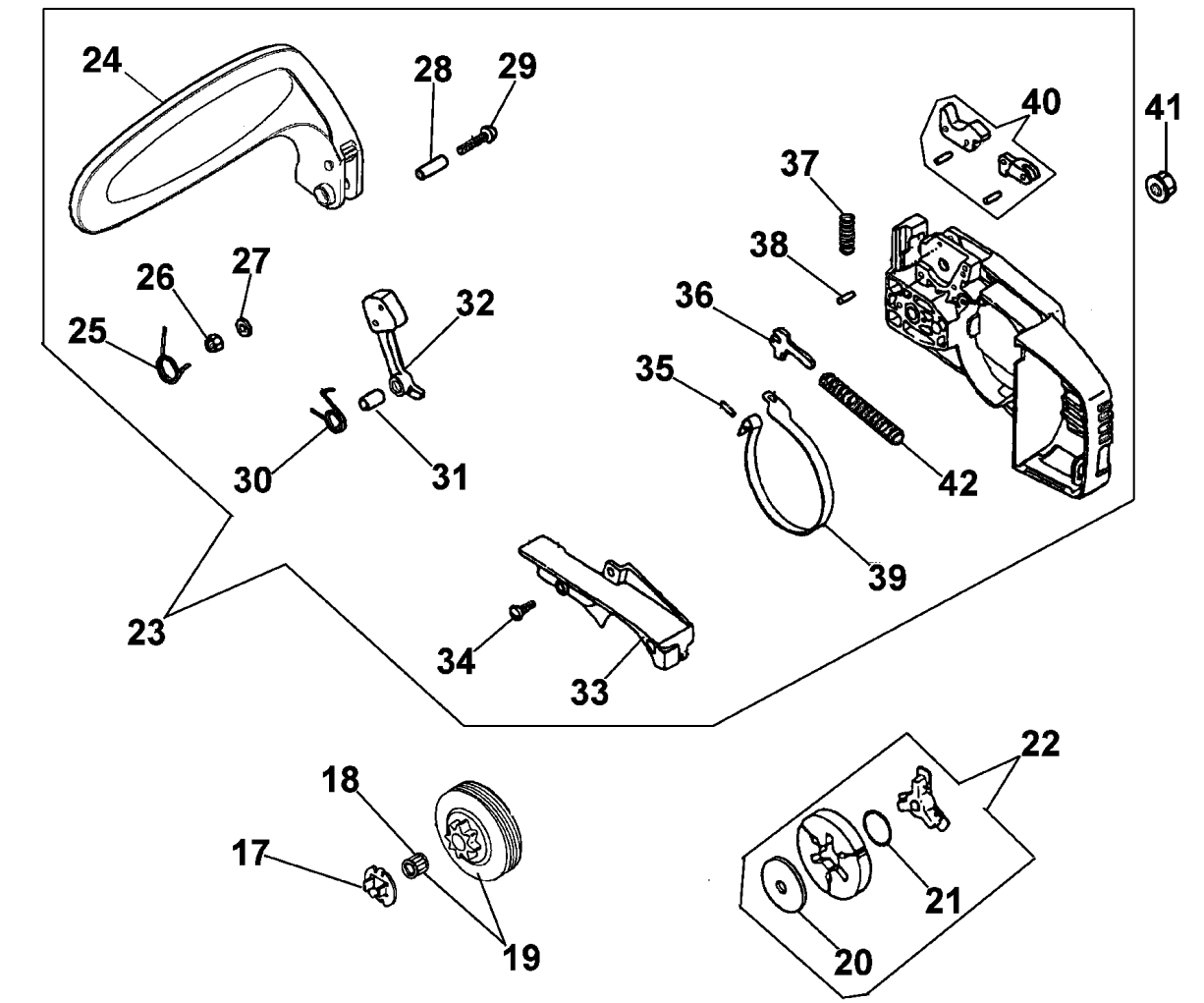
24
28
29
40
41
37
38
36
35
42
39
26
27
25
32
30
31
23
34
33
22
18
17
19
21
20

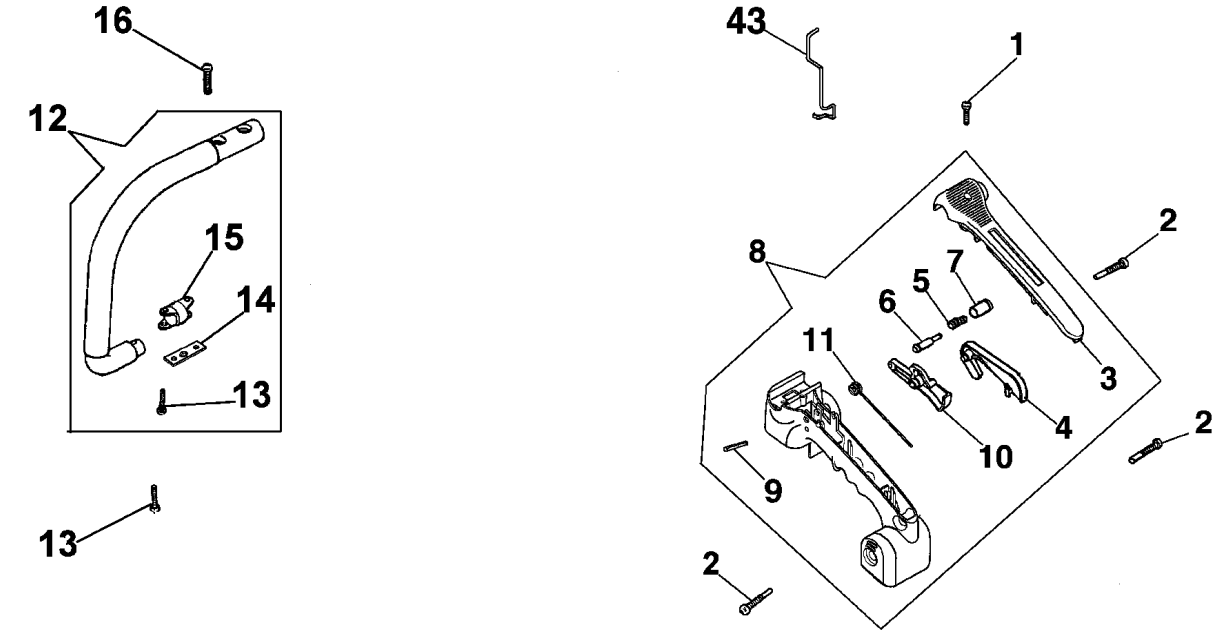
16
12
15
14
13
13
43
1
2
8
7
5
6
11
3
4
10
2
9
2

ИллюстрацияClutch and handles

Ссылка №	Кол-во	Код артикула	Наименование
1	1	50030269R	Screw
2	2	50030279	Screw
3	1	50030249	Cover
4	1	50030082AR	Throttle lever
5	1	50030077	Spring
6	1	50030076R	Pin
7	1	50030078R	Button
8	1	50032037	Handle kit
9	1	50030081	Pin
10	1	50030237	Throttle lever
11	1	50030080	Spring
12	1	50030065R	Handle
13	1	50030270	Screw
14	1	50030068	Strap
15	1	50030067R	Support
16	1	50030271	Screw
17	1	50030138R	Clutch driver
18	1	50030372	Bearing
19	1	50032009	Sprocket
20	1	50030092	Washer
21	1	50030350R	Spring
22	1	50030090A	Clutch
23	1	50032023R	Chain cover
24	1	50030242	Guard
25	1	50030100	Spring
26	1	3914003	Nut
27	1	3916005	Washer
28	1	50030105R	Spacer
29	1	50030292	Screw
30	1	50030110	Spring
31	1	50030106R	Bushing
32	1	50030107AR	Weight
33	1	50030122	Cover
34	1	50030272	Screw
35	1	50030116R	Pin
36	1	50030118R	Lever
37	1	50030111	Spring
38	1	50030117	Pin
39	1	50030119R	Brake band
40	1	50030113R	Brake lever
41	1	50010148R	Nut
42	1	50030121	Spring
43	1	50030368	Rod

FINO A NOVEMBRE 2004
TILL NOVEMBER 2004
BIS NOVEMBER 2004
HASTA NOVIEMBRE 2004
JUSQU'A NOVEMBRE 2004

16 ■ KIT RIPARAZIONE / REPAIR KIT

22 ● KIT MEMBRANE & GUARNIZIONI / DIAPHRAGM & GASKET SET

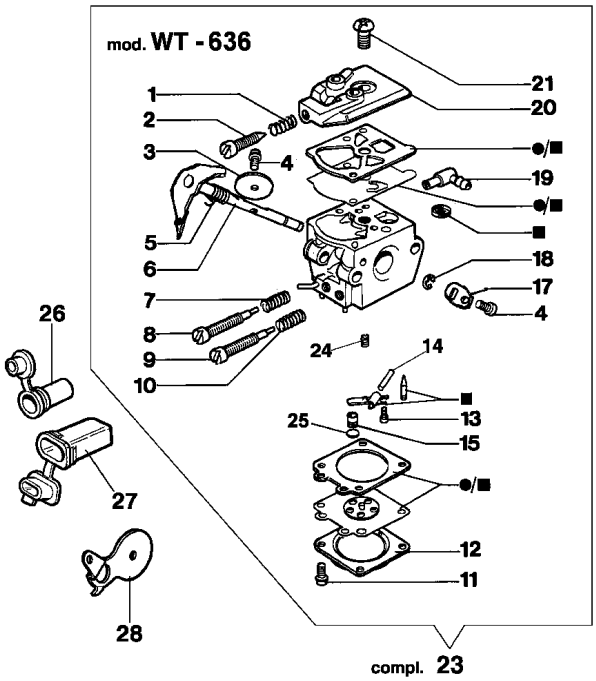

DA NOVEMBRE 2004
FROM NOVEMBER 2004
AB NOVEMBER 2004
DESDE NOVIEMBRE 2004
DEPUIS NOVEMBRE 2004

16 ■ KIT RIPARAZIONE / REPAIR KIT

22 ● KIT MEMBRANE & GUARNIZIONI / DIAPHRAGM & GASKET SET

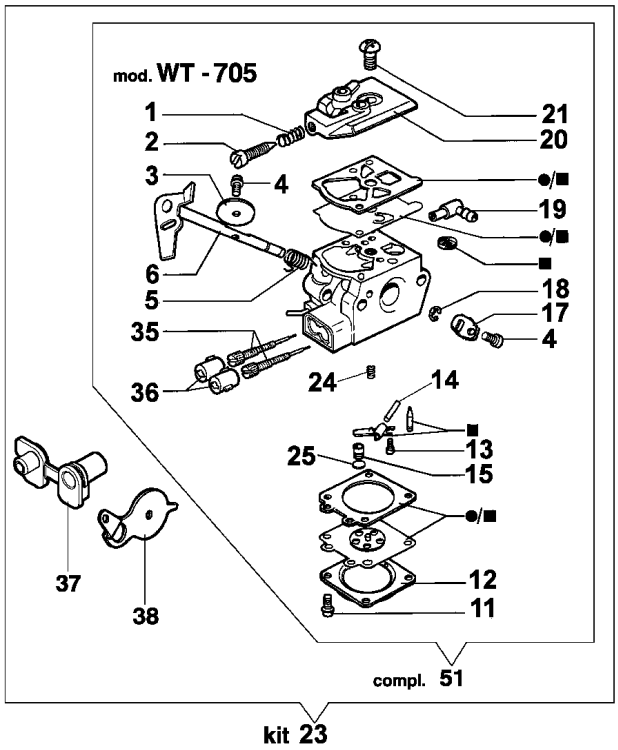

ИллюстрацияCarburetor WT-705

Ссылка №	Кол-во	Код артикула	Наименование
1	1	2318616	Spring
2	2	2318617	Screw
3	1	375100078	Shutter
4	1	003300209	Screw
5	1	2318615	Spring
6	1	2318620	Shaft
7	1	035000165	Spring
8	1	2318618	Screw L
9	1	2318619	Screw H
10	1	093500115	Spring
11	1	035000162	Screw
12	1	2318191	Cover
13	1	003300202	Screw
14	1	003300201	Spindle
15	1	093500218	Jet
16	1	094600209	Repair kit
17	1	2318614	Lever
18	1	095000164	Ring
19	1	003300036	Fittings
20	1	2318612	Cover
21	1	003300197	Screw
22	1	094600210	Kit guarn
23	1	50030361	Carburetor kit WT-705
24	1	093500541	Spring
25	1	094600142	Cap
26	1	50030174R	Screw guide
27	1	50030175R	Screw guide
28	1	50030167R	Starter lever
35	1	2318631	Screw
36	1	2318639	Clamp
37	1	50030385	Screw guide
38	1	50030337R	Starter lever
51	1	2318633R	Carburetor WT-705