SSG65100

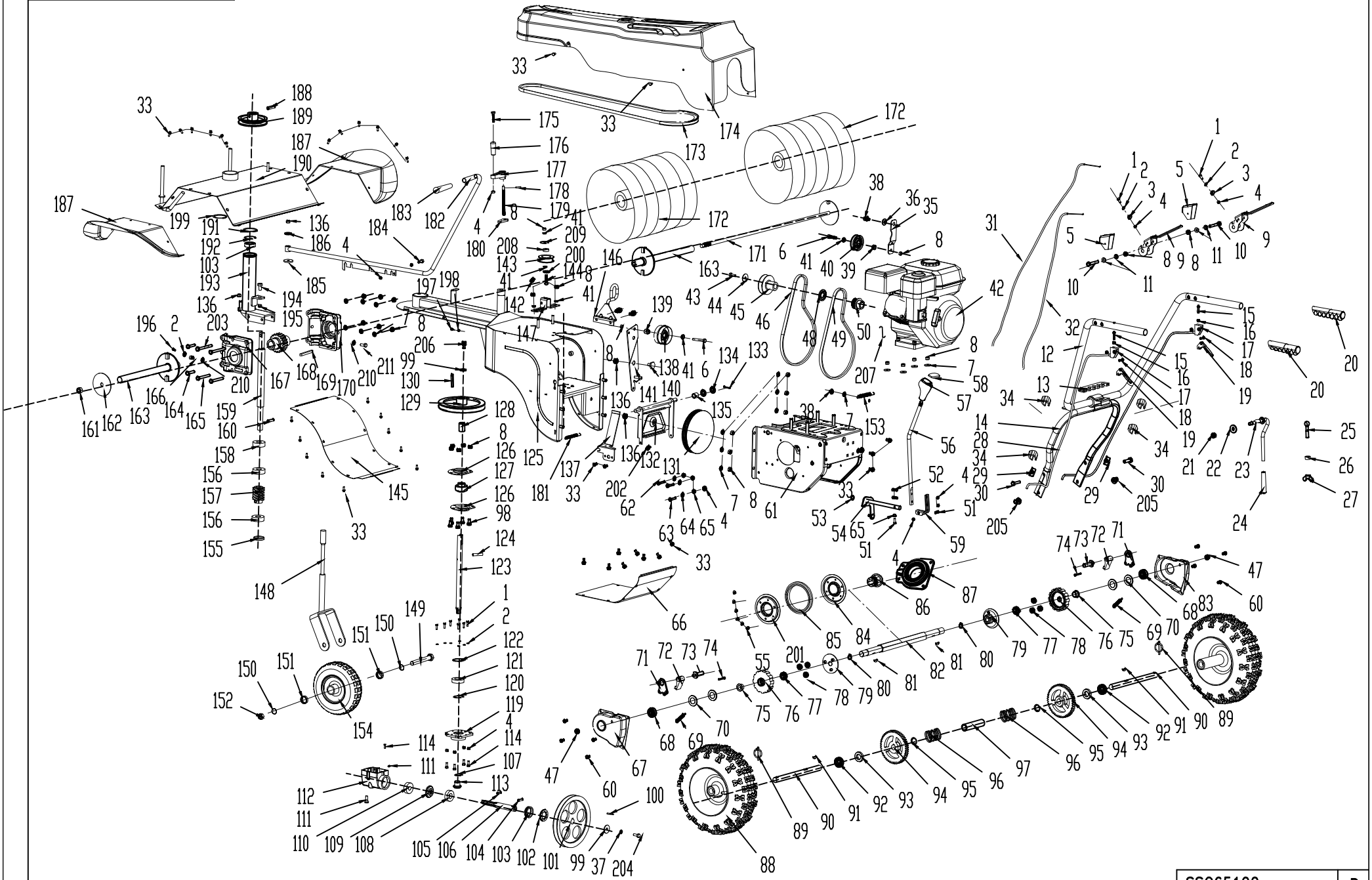

SSG65100 | B