REPAIR PARTS FOR UTILITY CARTS
MODEL NO'S. 45-01841, 45-02401 & 190-425A

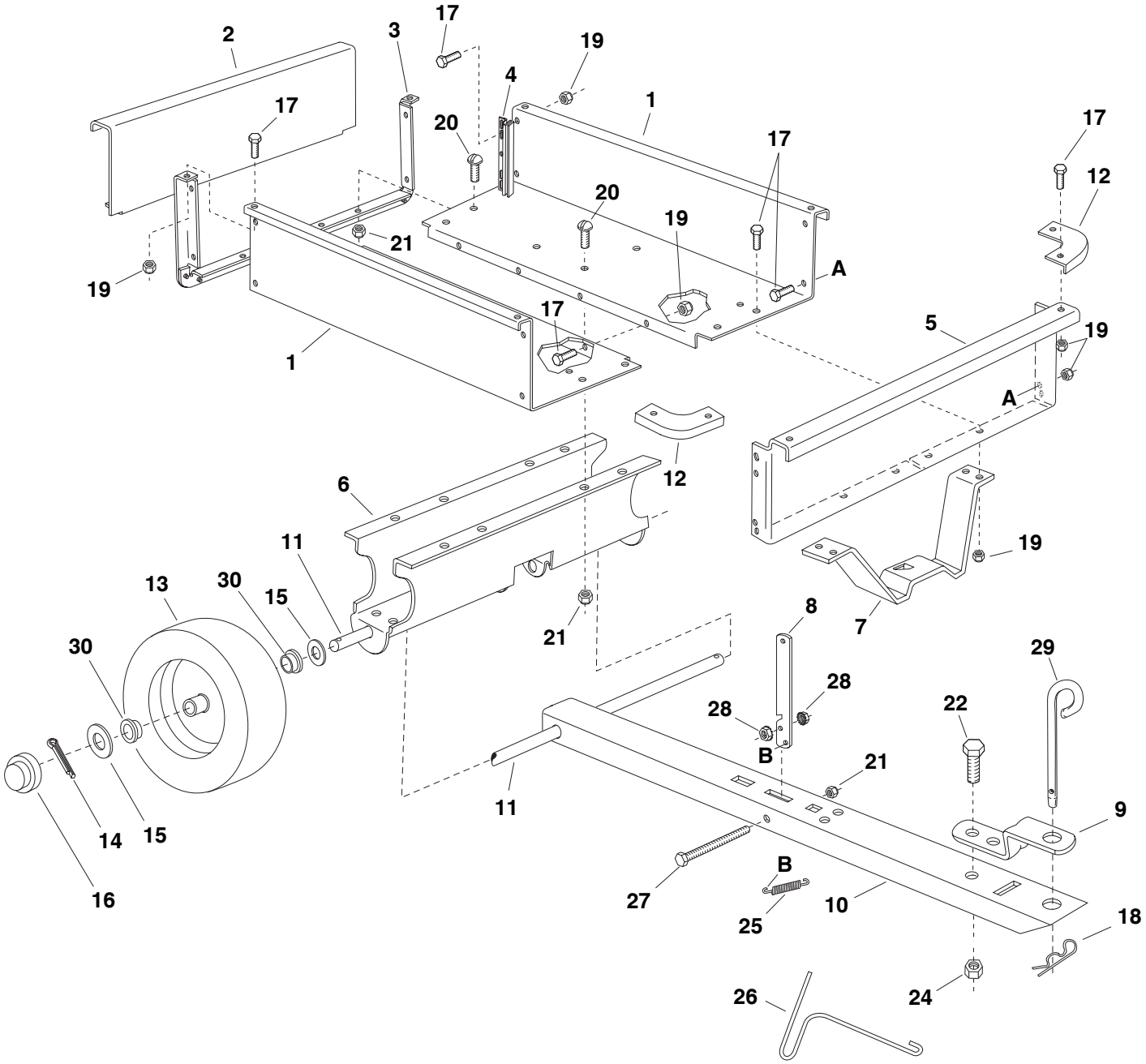

REPAIR PARTS LIST FOR UTILITY CARTS
MODEL NO'S. 45-01841, 45-02401 & 190-425A

REF. NO.	PART NO.	DESCRIPTION	45-02401	45-01841 190-425A
1	24096	Cart Body	2	-----
	23984	Cart Body	-----	2
2	23504	Tailgate	1	1
3	62457	Tailgate Reinforcement Bracket	1	1
4	23548	Tailgate Guide	2	2
5	23490	Front Panel	1	1
6	23487	Wheel Support	1	1
7	24497	Latch Stand Bracket	1	1
8	24498	Latch Lock Lever	1	1
9	23014	Hitch Bracket	1	1
10	24750	Draw Bar Tongue	1	-----
	24756	Draw Bar Tongue	-----	1
11	24897	Axle, 1" Dia.	1	1
12	23484	Front Corner Cap	2	2
13	43594	Wheel, 16/6.5" x 8.00	2	2
14	43093	Cotter Pin, 1/8" Dia. x 1-1/2" *	2	2
15	43601	Washer, Flat 1" *	4	4
16	43014	Hub Cap	2	2
17	43012	Hex Bolt, 1/4-20 x 3/4" *	33	33
18	43343	Hair Cotter Pin, 1/8 (#4) *	1	1
19	47189	Nylock Nut, 1/4-20	33	33
20	43814	Truss Hd. Bolt, 5/16-18 x 3/4" Lg. *	12	12
21	47810	Nylock Nut, 5/16-18	13	13
22	43001	Hex Bolt, 3/8-16 x 1" Lg. *	1	1
24	HA21362	Nylock Nut, 3/8-16 *	1	1
25	47408	Extension Spring	1	1
26	47622	Spring Puller Tool	1	1
27	47407	Hex Bolt, 5/16-18 x 4" *	1	1
28	46980	Hex Nut, 5/16-18 (SEMS)	2	2
29	23353	Hitch Pin	1	1
30	44488	Wheel Bearing	4	4
	48452	Owner's Manual	1	1

* Purchase Common Hardware Locally

SpeedEPart the fastest way to purchase parts www.speedepart.com